Misr University For Science and Technology

College of Engineering

Biomedical Engineering Department

B.Sc. Final Year Project

G R A D U S

Smart Medical Walker

Presented By:

1. *Adham Yasser Roshdy* *91154*
2. *Eslam Osama Mahmoud* *91155*
3. *Mohamed Mossa Abdelmalek* *91173*
4. *Adham Ahmed Ali* *91549*
5. *Hesham Osama Kamel* *92999*

Supervised By:

Dr. Islam A. Fouad *Dr. Nader A. Rahman*

Misr University For Science and Technology

College of Engineering

Biomedical Engineering Department

B.Sc. Final Year Project

GRADUS

Smart Medical Walker

Supervised By:

Dr. Islam A. Fouad *Dr. Nader A. Rahman*

DECLARATION

I at this moment certify that this material, which I now submit for assessment on the program of study leading to the award of Bachelor of Science in *Biomedical Engineering* is entirely my work, and that I have exercised reasonable care to ensure that the work is original, and does not to the best of my knowledge breach any law of copyright, and has not been taken from the work of others save and to the extent that such work has been cited and acknowledged within the text of my work.

Signed: _____

Registration No.: _____

Date: / /

ACKNOWLEDGMENT

We want to express our deepest gratitude to Misr University for Science and Technology (MUST) for allowing us to undertake this graduation project. We sincerely thank the engineering dean, Dr. Ghada M. Amer, for her support and guidance throughout our academic journey.

We are also immensely thankful to Dr. Islam A. Fouad, the head of the Biomedical Engineering Department, for his continuous encouragement and valuable insights that have contributed to the success of our project.

Our heartfelt appreciation goes to our graduation project supervisors, Dr. Nader A. Rahman, and Dr. Islam A. Fouad. His expertise, guidance, and unwavering support have been invaluable in shaping the direction of our research and helping us navigate through the challenges. encountered during the project.

We would also like to extend our gratitude to all the faculty members, technical staff, and fellow students who have provided their support, encouragement, and assistance throughout our project.

Lastly, Without the support and collaboration of all these individuals and institutions, this project would not have been possible. We are sincerely grateful for them. contributions to our education and the successful completion of our graduation project.

ABSTRACT

This document discusses the development of a sensitized smart walker designed to enhance the rehabilitation process for patients recovering from neurological or physical injuries. Many individuals in rehabilitation rely on walkers for support in relearning essential skills, such as walking. Physical therapists seek to reduce patient dependence on these assistive devices and monitor progress through metrics like weight on the walker and gait speed. However, current measurement methods involve manual assessments or visual observation, lacking a clinically targeted "smart" walker that can provide objective data.

To address this gap, we developed an attachment for a two-wheeled/glider walker with integrated load cells in the feet to measure weight and an IMU (MPU-6050) Gyroscope + Accelerometer Sensor Module module to measure the speed and distance. The collected data is transmitted in real-time to an application via an ESP8266 microcontroller and flutter.

We acknowledge errors and propose future development goals, including the creation of an adaptive calibration system to correct weight sensor drift and improvements to the GPS module system for more accurate measurements.

The introduction of a sensitized smart walker is deemed a significant advancement in rehabilitation. By providing objective data on weight and speed, the smart walker enables information on progress by monitoring a patient's motor independence. Despite the noted errors in the initial trials, the researchers are committed to refining the system to enhance accuracy and reliability, demonstrating the potential of this technology to revolutionize the neurorehabilitation process and contribute valuable insights for patient care and treatment optimization.

TABLE OF CONTENTS

1. Chapter One: Introduction.....Page 11:12
2. Chapter Two: INFORMATION GATHERING.....Page 13:17
3. Chapter Three: PRODUCT DESIGN SPECIFICATIONS.....Page 18:19
4. Chapter Four: PRELIMINARY SPEED/DISTANCE DESIGNS.....Page 20:22
5. Chapter Five: PRELIMINARY MECHANICAL WEIGHT DESIGNS.....Page 23:25
6. Chapter Six: PRELIMINARY SPEED/DISTANCE AND MECHANICAL WEIGHT DESIGNS EVALUATION.....Page 26:29
7. Chapter Seven: PROPOSED FINAL DESIGN.....Page 30:39
8. Chapter Eight: MANUFACTURING/ DEVELOPMENT PROCESS.....Page 28:37
9. Chapter Nine: DISCUSSION.....Page 38:40
10. Chapter Ten: CONCLUSIONS……..Page 41
11. Chapter Eleven: REFERENCES.....Page 42:43
12. Chapter Twelve: APPENDIX.....Page 44:51

LIST OF TABLES

Table 1: Speed/Distance design matrix. ……Page 25

Table 2: Weight design matrix…….… Page 27

Table 3: NEO-6M GPS…….. Page 32

Table 4: Project timeline…….....Page 45

Table 5: Materials and budget ……...Page 46

LIST OF UTILIZED STANDARDS

- Address privacy concerns and data security measures.
- Ensure compliance with relevant healthcare regulations and standards.
- Walker should be able to last for a minimum of 5 years.
- Needs to support a variety of different weights (Will support up to 136 kg).
- Weight should ideally be between 4.54kg and 9.07kg.
- Max width = 63.5 cm.
- Max height between 81.2 cm to 101. 6 cm.
- Walker should have a very simplistic design for easy use.

Chapter One

INTRODUCTION

After a serious injury, be it physical or neurological, the long road to recovery often includes re-learning to walk. The neurorehabilitation process can be long and arduous and during this time, every second spent with professionals—doctors, physical therapists, clinicians—is valuable. Physical therapists need to evaluate and understand the unique needs of the patient as the demographic of individuals in need of rehabilitation is substantial, with stroke survivors, individuals with traumatic brain injuries, and those suffering from neurological disorders making up a significant portion.

Many of these individuals require walkers and assistive devices during their rehabilitation journey. However, there is a significant lack of commercially available smart walkers adapted to a clinical setting that can provide objective sensor data that tracks the motor independence of patients. Extensive research indicates that technology-assisted interventions can improve gait,

balance, and overall mobility and objective measurements can lead to better outcomes [1]. Smart clinically tailored walkers would be able to provide objective sensor data on weight, gait speed, and balance, among other notable measurements [2].

Currently, the assessment of a patient's progress relies heavily on subjective observations by physical therapists. Objective data throughout the rehabilitation process would enable physical therapists to effectively monitor the progress of their patients, make more informed diagnostic decisions, and better tailor rehabilitation plans to the individual [3]. Objective progress tracking can also enhance patient care and independence where real-time or instant feedback on their gait, balance, and motor control can significantly help a patient. Seeing tangible long-term progress can boost the confidence and commitment of patients to the rehabilitation process.

Beyond individual patient care, smart assistive devices can be employed by researchers to analyze and develop rehabilitation strategies, benefiting a wider range of patients.

We are motivated to develop a smart walker tailored to clinical settings that can provide objective data that tracks a patient's dependence which can significantly help the diagnostic progress, improve rehabilitation/intervention strategies, and enhance the care of patients in their neurorehabilitation journey.

Also, we want to make it available for all rehabilitation centers in the world and it can be affordable to help more doctors in their diagnosis and treatment. Therefore, we are making it with a great user experience and as accurate as possible. With a session time of 20 minutes (as the physical therapist surveys)

Chapter Two

INFORMATION GATHERING

Problem Identification

Patients with mobility impairments involved in the neurorehabilitation process often use walkers as transitional devices that can aid with their coordination and balance.

Within the rehabilitation process, clinicians or physical therapists often aim to reduce a patient's dependency on walkers as they regain motor control. However, there is yet to be a commercial smart walker that can track a patient's functional independence and deliver objective data for physical therapists and patients.

Physical therapists in the Rehabilitation Hospital request a sensitized smart walker that can track in real time a patient's distance traveled, gait speed, and applied weight distribution on the walker. In turn, the Smart Walker will be capable of tracking a patient's motor control through their dependency on the walker and provide objective data of improvement over time. The data can be utilized for motivational purposes for the client along with insurance/Medicare reasons to evaluate the efficacy of intervention strategies. A sensitized smart walker would enhance the neurorehabilitation process by providing vital data for progress monitoring of a patient's motor independence.

Background

The demographic of patients in rehabilitation encompasses a wide range of individuals who have experienced various neurological disorders and injuries. Some of the most common neurological disorders and injuries can include stroke, traumatic brain or spinal cord injury, neurodegenerative diseases (ALS, Parkinsons, …), and musculoskeletal injuries.

There are an extensive number of unique ways in which different neurological disorders can lead to motor impairment and affect balance, coordination, and movement. Stroke and spinal cord injuries can lead to partial or complete paralysis rendering certain muscle groups unresponsive. Peripheral neuropathy among other sensory impairment-related disorders can lead to sensory deficits that make it difficult to maintain balance. Other neurological disorders including Alzheimer's disease or traumatic brain injuries can affect a person's ability to plan and execute coordinated movements.

Several rehabilitative strategies exist for individuals with physical impairments that are targeted to the individual. Strategies may include patients working on walking, transferring from a bed to a chair, walking along a predetermined path, and other mobility-related tasks.

Throughout the physical neurorehabilitation process, walkers and other assistive devices can be used to supplement the balance and coordination of patients. Physical therapists conduct regular assessments to monitor the patient's progress. This includes evaluating changes in strength, range of motion, pain levels, balance, and other relevant factors. Assessments can be objective (strength tests, range of motion exercises, gait analysis…) but are also largely subjective through open communication and feedback from the patient.

The integration of objective data in combination with subjective analysis is an effective approach to improving patient outcomes in the rehabilitation process.

Injury & Statistics:

• Foot Injuries: there were approximately 17.2 million nonfatal injuries globally that resulted from falls, slips, or trips. Many of these injuries could potentially affect the feet and require a period of treatment for individuals to regain the ability to walk.

• Back Injuries: Back injuries are a significant global health concern. According to the World Health Organization (WHO), back pain is the leading cause of disability worldwide. It's estimated that around 80% of people will experience back pain at some point in their lives.

• In 90% of injuries to athletes are used medical walker in rehabilitation.

• Elderly Population in Egypt: In 2022, Egypt had an estimated elderly population (aged 60 and above) of around 10-11 million people.

• Elderly Population Worldwide: Globally, the elderly population (aged 60 and above) was approximately 1 billion in 2022.

• Blind Population in Egypt: In 2022, Egypt had an estimated blind population of around 1.4 million people.

• Blind Population Worldwide: Globally, the number of blind individuals was approximately 41 million in 2022.

Competing and Current Designs

There are a few commercial smart walkers on the market along with attachable devices to sensitize a walker, however, each comes with its unique disadvantages. First, the Camino Smart Walker is an electric-powered walker device integrated with boosts and brakes. The walker uses artificial intelligence to track 22 different gait metrics and maintain the safety of the user while maximizing their efficiency. However, it has notable drawbacks, including its high 3000-dollar cost, which may be financially prohibitive for many patients and clinical settings. Many of its features are also redundant and unnecessary given the intended features and specifications requested by our client. Additionally, the lack of seamless clinical data recording limits its adaptability in a clinical setting.

Figure 1: *the Camino Smart Walker*

The Amtrak Device is an installable device for a walker with a display that shows real-time gait speed. The device attaches to the wheel to measure the RPM and has an LED display. Although the device can display data in real-time, it does not have the capability of uploading this information to a server. It also does not record the applied weight distribution of the patient on the walker. Another notable smart assistive device design is the Intelliwalker, a design published for patent approval in 2015, which is a walker equipped with various sensors to monitor the balance and movement of an individual and then in turn help the user navigate their environment through a motorized system.

Like the previous designs, the Intelliwalker is mainly for commercial use and not adapted to a clinical setting where sensor data cannot be recorded and uploaded to a server for further analysis. Many of the features, including a self-propelling system along with the built-in motors are redundant and unnecessary in the context of the neurorehabilitation process. Importantly the patent was abandoned in 2016, but the design can still serve as a useful reference.

Figure 2: The Amtrak Device

Chapter Three

PRODUCT DESIGN SPECIFICATIONS

Product Design Specifications and Design Constraints

From a biomechanics perspective, walkers can enhance the mobility and balance of patients by providing a wider base of support and more points of contact with the ground. With a larger base of support, a patient can distribute their weight and transfer some of the burden off their legs making the walking process physically less arduous, and psychologically the walker can support the confidence of a patient. Distributing a patient's weight through their arms to the walker handles also allows a patient to more easily adjust their center of weight relative to their center of mass to maintain balance. The weight a patient places on the walker along with their capable gait speed can also be indicative of their reliance on the walker and functional independence. It is a common goal in the rehabilitation process to decrease one's dependence on these assistive devices. And in evaluating patient dependence, a physical therapist may employ manual measurement including using timers for measuring gait speed, or a subjective visual analysis of how much weight they are exerting. However, there is notably not a common smart walker among clinical settings for physical neurorehabilitation with objective calibrated measurements that can directly determine the patient's reliance on the device.

we expected a budget of (3000 L.E-9000 L.E) $ 100-$300 to produce one Smart Walker with the ability to measure speed, distance, and applied mechanical weight. As this Smart Walker is being used for rehabilitation, it mustn't add any obstacles for the patient. This means that any elements added to the structure of the walker should not intrude into the walking path of the patient or add more than 1t.81kg to the overall weight of the walker

so that it can still be easily moved by patients. An average walker supports 136 kg, and this will remain true of the Smart Walker.

Additionally, the walker purchased for the project weighs 3.63 kg, so the final weight of the Smart Walker should not exceed 5.44kg. The use of the walker Infor rehabilitation purposes also means that the walker will be used at a max of around 4.83 kph, so the sensors will need to be accurate to within 5% of true values to prevent accumulation of error at such slow speeds, as well as to be able to detect small changes during the rehabilitation process. The Smart Walker will remain in the clinic, and be used by many patients, so it will need to be adjustable to keep the grips at waist level for patients of varying heights. The purchased walker is flexible between heights of 1.65-1.93 meters, and our design should not change this. Patients at different stages of recovery will apply different amounts of weight to the walker, so the weight sensors should be able to measure weights up to the average weight of 70 kg.

Additionally, to be used safely by many patients the walker will need to be sanitized between uses, so our design should not be sensitive to sanitizing materials. Finally, as a medical device that records patient data, the Smart Walker will need to comply with safety and user.

privacy standards and regulations, such as ISO 14971 and Health Insurance Portability and Accountability Act (HIPAA) .

There are also some notable codes and standards that will be referenced in the development of the smart walker including ISO 14971 which provides further guidance on risk management and evaluation for in vitro diagnostic medical devices especially if physical therapists use the sensor data to diagnose the patient in any way or determine future treatments or interventions. IEC 60601 details standards and guidelines in building medical electrical equipment, and our device which will employ electronic sensors and be used in the context of rehabilitation for helping patients can be labeled as medical electrical.

Chapter Four

PRELIMINARY SPEED/DISTANCE DESIGNS

Design #1 - Magnetic Sensor:

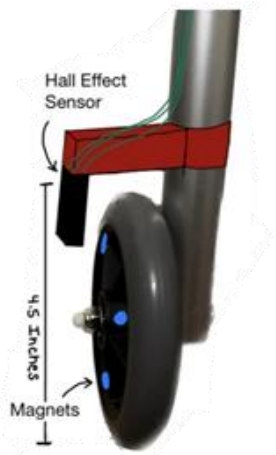

Figure 3: The magnetic sensor design

For the magnetic sensor design, magnets would be placed on each of the spokes of the wheels of the walker and a Hall effect sensor would be placed at an appropriate distance from the face of the wheel. The Hall effect sensor would be attached to the leg of the walker, so it does not move with the rotation of the wheel. The sensor acts as a closed circuit when it detects a magnetic field, so as the wheel rotates, and the magnets move in and out of the range of the sensor, the voltage spikes in the circuit can be recorded. The time between these voltage spikes can be used with the known distance between magnets to find both the speed and distance traveled of the walker. Hall effect sensors can be built to a variety of specifications, and there are some that are sensitive to magnetic fields as small as 2 MT, meaning low-cost magnets could be used.

Design #2 - Light Sensor (photogate sensor):

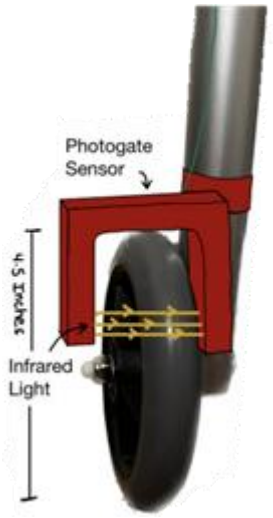

Figure 4: The light sensor design

The light sensor design uses a photogate sensor to track the rotation of the wheel. The photogate sensor sends an infrared light laser from one half of the sensor to the other and senses when the laser's connection is disrupted.

As the wheel spins the spokes of the wheel disrupt the laser of the photogate sensor. Dividing the number of interruptions by the number of spokes on the wheel would provide the number of rotations. Rotations per minute could then be calculated.

Design #3 - Distance Sensor:

Figure 5.2: The ultrasonic sensor design

Figure 5.1: The distance sensor

The distance sensor would use an ultrasonic distance sensor. This sensor would send out an ultrasonic wave which bounces off of a surface and returns to the sensor which tracks the amount of distance traveled between sending and receiving the wave. The sensor would be mounted to the top bar of the walker which would make for easy integration into the existing walker. To account for some sense of turning a second distance sensor could be placed on the

other end of the bar, so as the walker rotates the sensor would track the change of distance. This system would still have very questionable accuracy and would not be able to account for full turns.

Chapter Five

PRELIMINARY MECHANICAL WEIGHT DESIGNS

Various methods of weight/force measurement were considered during the initial brainstorming including compression force sensors, hydraulics, and even pneumatics. Ultimately, force sensing resistors were chosen for the project due to their easy integration into the design and ESP8266 setup, inexpensive cost, and minimal size profile.

Design #1 - Handle Placement

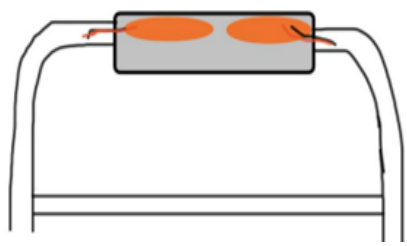

Figure 6: Handle placement design

The handle placement design would require the use of multiple force sensing resistors to cover the surface area of the handles, and would require routing of wires down the tubing to the centrally-located micro controller. Even more sensors could be incorporated into this design on the underside of each handle to get readings on the grip force of the patient while using the walker, which would provide even more data for the client.

Design #2 - Foot Placement

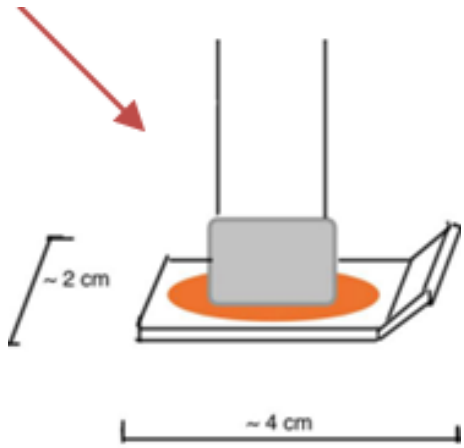

Figure 7: Foot placement design

This design would require using one load cell at each of the feet of the walker. The load cells would be placed in between the bottom of the foot of the walker and the glider. This would enable the sensor to get an accurate weight reading while maintaining some durability by not placing the sensor in direct contact with the ground where it would likely be damaged.

Design #3 - Wheel Placement:

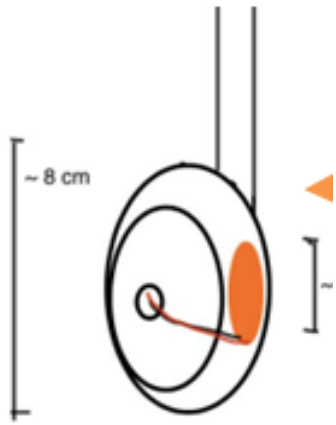

Figure 8: wheel placement design

The wheel placement design would include placing a force sensing resistor on the outer circumference of the wheel, and would give a weight reading at each rotation of the wheel when the weight sensor makes contact with the ground. The fabrication of this design would be difficult as the wires from the sensor would need to be routed through the wheel axle in order to not get tangled during use. However, in theory, this design would also be able to provide speed and distance measurements as the weight recording would indicate how quickly the wheel would be rotating.

Chapter Six

SPEED/DISTANCE DESIGN AFTER FINAL UPDATES

IMU (MPU-6050) Gyroscope:

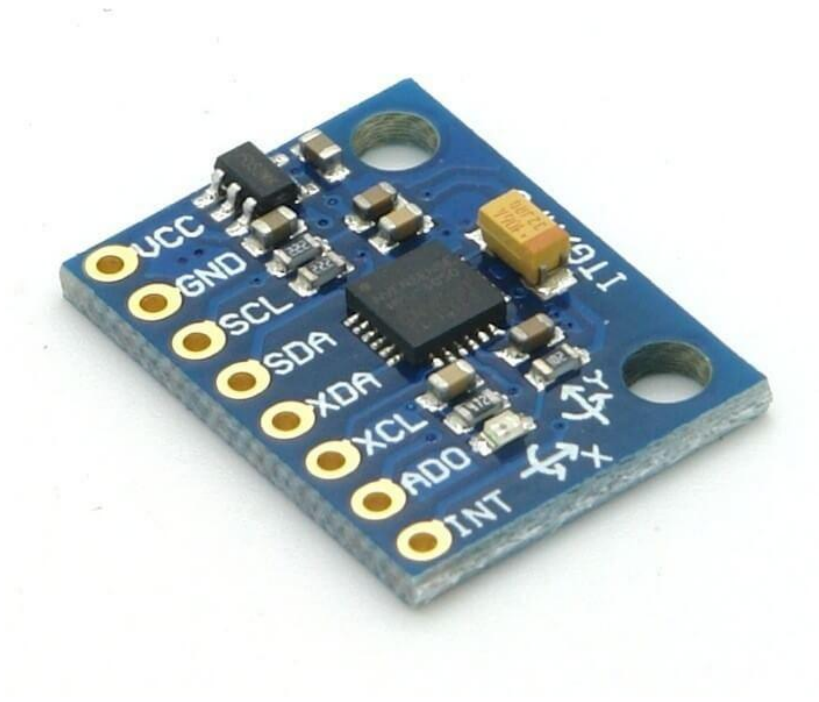

Figure 9: *IMU (MPU-6050) Gyroscope*

The MPU-6050 is a popular and widely used Inertial Measurement Unit (IMU) that combines a 3-axis gyroscope and a 3-axis accelerometer. It's often used in projects involving motion tracking, robotics, and other applications requiring orientation and movement data.

Applications

1. **Motion Tracking:** Used in drones, robotics, and VR systems to track movement.

2. **Stabilization Systems:** Used in gimbals and other stabilization systems.

3. **Gesture Recognition:** Detecting gestures for user interfaces.

4. **Sports Analysis:** Tracking movement in sports for performance analysis.

Features & Benefits:

- Digital output of 6-axis Motion Fusion data. 9-axis fused data from Motion Processing Library.
- Tri-Axis angular rate sensor (gyro) with a sensitivity up to 131 LSBs/dps and a full-scale range of ±250, ±500, ±1000, and ±2000dps.
- Tri-Axis accelerometer with a programmable full-scale range of ±2g, ±4g, ±8g and ±16g.
- Reduced settling effects and sensor drift by elimination of board-level cross-axis alignment errors between accelerometers and gyroscopes.
- Digital Motion Processing™ (DMP™) engine offloads complex Motion Fusion, sensor timing synchronization and gesture detection.
- Motion Apps™ Platform support for Android, Linux, and Windows.
- Embedded algorithms for run-time bias and compass calibration in library. No user intervention required.
- Digital-output temperature sensor
- Digital input on FSYNC pin to support video Electronic Image Stabilization and GPS.

- Programmable interrupt supports gesture recognition, panning, zooming, scrolling, and shake detection
- VDD Supply voltage range of 2.375V–3.46V; VLOGIC (MPU-6050) at 1.8V±5% or VDD.
- Gyro operating current: 3.6mA (full power, gyro at all rates).
- Gyro + Accel operating current: 3.8mA (full power, gyro at all rates, accel at 1kHz sample rate).
- Accel low power mode operating currents: 10µA at 1Hz, 20µA at 5Hz, 70µA at 20Hz, 140µA at 40Hz.
- Full Chip Idle Mode Supply Current: 5µA.
- 400kHz Fast Mode I²C or up to 20MHz SPI (MPU-6000 only) serial host interfaces
- User self-test.
- 10,000g shock tolerant.
- Smallest and thinnest package for portable devices (4 × 4 × 0.9 mm QFN).
- RoHS and Green compliant.

Pin Configuration:

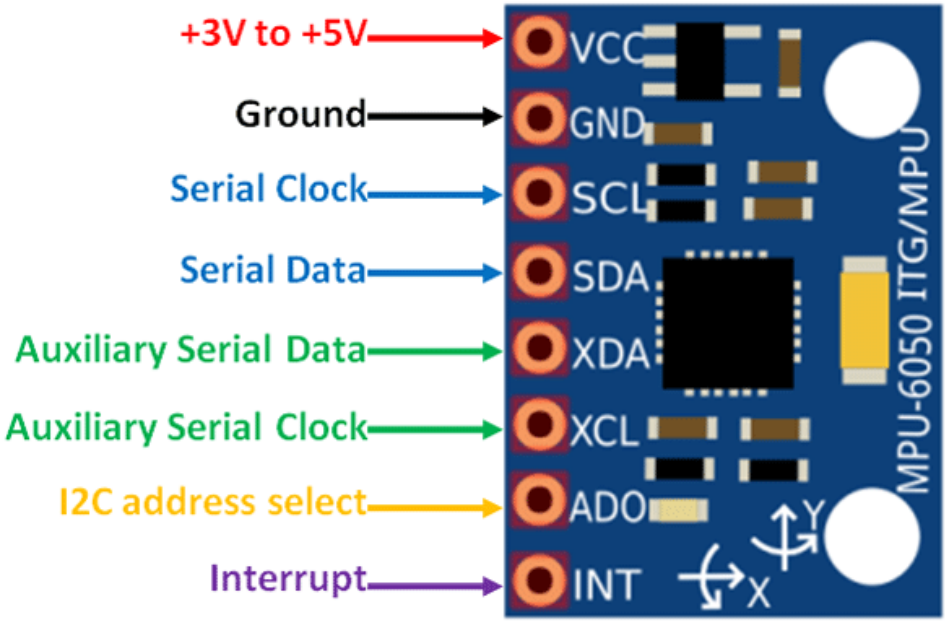

Figure 10: *IMU (MPU-6050)*

- VCC: Power supply pin (3.3V to 5V).
- GND: Ground.
- SCL: Serial Clock Line (I2C clock).
- SDA: Serial Data Line (I2C data).
- XDA: Auxiliary I2C data (not usually used).
- XCL: Auxiliary I2C clock (not usually used).
- AD0: I2C address select pin. Connect to GND for address 0x68 and to VCC for address 0x69.
- INT: Interrupt pin (optional, for advanced use).

.The NEO-6M GPS Module:

The NEO-6M GPS module is shown in the figure below. It comes with an external antenna and doesn't come with header pins. So, you’ll need to get and solder some.

Figure 11: *The NEO-6M GPS Module*

- This module has an external antenna and built-in EEPROM.
- Interface: RS232 TTL
- Power supply: 3V to 5V
- Default baud rate: 9600 bps
- Works with standard NMEA sentences

Pin Wiring

The NEO-6M GPS module has four pins: VCC, RX, TX, and GND. The module communicates with the Arduino via serial communication using the TX and RX pins, so the wiring couldn't be simpler:

NEO-6M GPS Module	**Wiring to Arduino UNO**
VCC	5V
RX	TX pin defined in the software serial

TX	RX pin defined in the software serial
GND	GND

Table 3: NEO-6M GPS

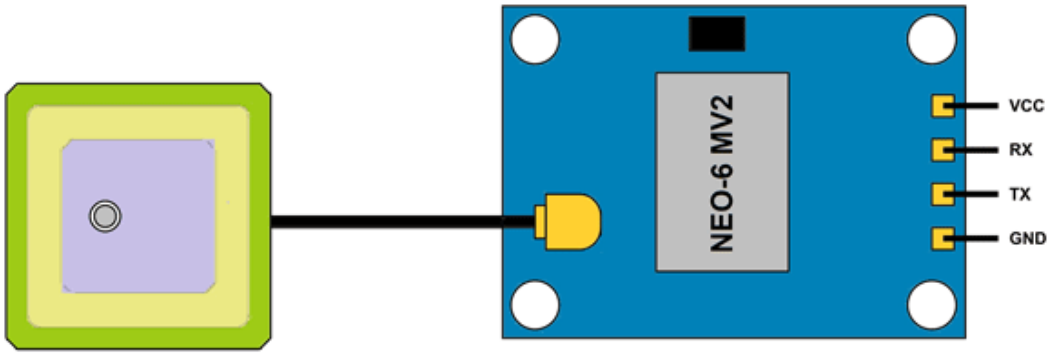

Figure 11: the NEO-6M GPS Module wiring

To get raw GPS data you just need to start a serial communication with the GPS module using Software Serial. Once your position has been determined, the GPS unit can calculate other information, such as:

- Speed
- Distance to destination
- Track
- Longitude & latitude

Overview of NEO-6M GPS Module

- NEO-6M GPS Chip
- The heart of the module is a NEO-6M GPS chip from u-blox. It can track up to 22 satellites on 50 channels and achieves the industry's highest level of sensitivity i.e. -161 dB tracking, while consuming only 45mA supply current. The u-blox 6 positioning engine also boasts a Time-To-First-Fix (TTFF) of under 1 second. One of the best features the chip provides is Power Save Mode(PSM). It allows a reduction in system power consumption by selectively switching parts of the receiver ON and OFF. This dramatically reduces the power consumption of the module to just 11mA making it suitable for power-sensitive applications like GPS wristwatch. The necessary data pins of the NEO-6M GPS chip are broken out into "0.1″ pitch headers. This includes pins required for communication with a microcontroller over UART.

- **Note**:- The module supports baud rate from 4800bps to 230400bps with default baud of 9600.

Figure 12: the NEO-6M GPS Chip

- **Position Fix LED Indicator**

- There is an LED on the NEO-6M GPS Module which indicates the status of Position Fix. It'll blink at various rates depending on what state it's in

- **No Blinking** ==> means It is searching for satellites

- **Blink every 1s** – means Position Fix is found

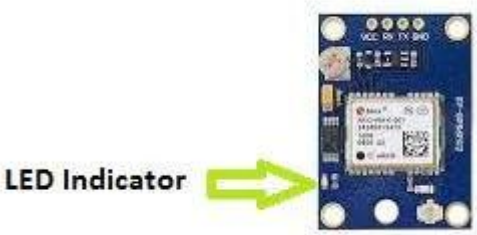

Figure 13: the NEO-6M GPS LED Indicator

- **3.3V LDO Regulator**

- The operating voltage of the NEO-6M chip is from 2.7 to 3.6V. But, the module comes with a MIC5205 ultra-low dropout 3V3 regulator from MICREL. The logic pins are also 5-volt tolerant, so we can easily connect it to an Arduino or any 5V logic microcontroller without using any logic level converter.

Figure 14: the NEO-6M GPS LDO Regulator

- **Battery & EEPROM**

- The module is equipped with an HK24C32 two-wire serial EEPROM. It is 4KB in size and connected to the NEO-6M chip via I2C. The module also contains a rechargeable button battery which acts as a super-capacitor.

- An EEPROM together with a battery helps retain the battery-backed RAM (BBR). The BBR contains clock data, the latest position data (GNSS orbit data), and module configuration. But it is not meant for permanent data storage.

- As the battery retains the clock and last position, the time to first fix (TTFF) significantly reduces to 1s. This allows much faster position locks.

- Without the battery the GPS always cold-start so the initial GPS lock takes more time. The battery is automatically charged when power is applied and maintains data for up to two weeks without power.

Figure 15: the NEO-6M GPS

Chapter Seven

WEIGHT SENSOR DESIGN AFTER FINAL UPDATES

APPLICATIONS:

1. Weigh Scales
2. Industrial Process Control

FEATURES

- Two selectable differential input channels
- On-chip active low noise PGA with selectable gain of 32, 64, and 128
- On-chip power supply regulator for load-cell and ADC analog power supply
- On-chip oscillator requiring no external component with optional external crystal
- On-chip power-on-reset
- Simple digital control and serial interface: pin-driven controls, no programming needed
- Selectable 10SPS or 80SPS output data rate
- Simultaneous 50 and 60Hz supply rejection

• Current consumption including on-chip analog power supply regulator: normal operation < 1.5mA, power down < 1uA

• Operation supply voltage range: 2.6 ~ 5.5V

• Operation temperature range: -40 ~ +85℃ • 16 pin SOP-16 package

Pin configuration:

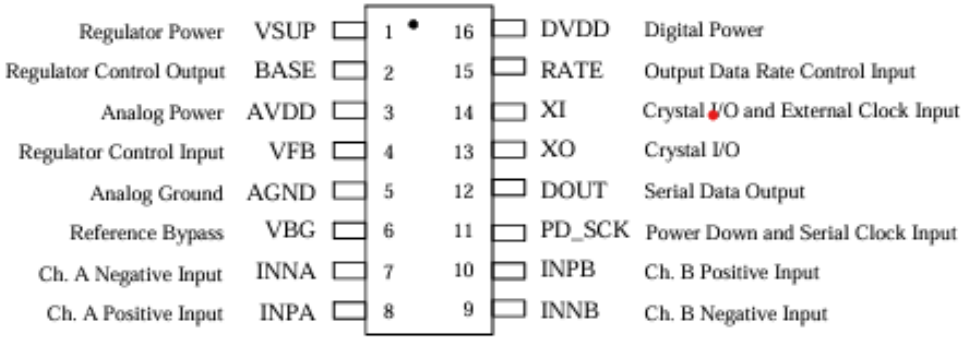

SOP-16L Package

1. VSUP Power Regulator supply: 2.7 ~ 5.5V
2. 2 BASE Analog Output Regulator control output（NC when not used）.
3. 3 AVDD Power Analog supply: 2.6 ~ 5.5V
4. 4 VFB Regulator control input（connect to AGND when not used
5. 5 AGND Ground Analog Input Analog Ground
6. 6
7. VBG Analog Output Reference bypass output INA- Analog Input Channel A negative input
8. INA+ Analog Input Channel A positive input
9. INB- Analog Input Channel B negative input
10. INB+ Analog Input Channel B positive input
11. PD_SCK Digital Input Power down control (high active) and serial clock input

12. DOUT Digital Output Serial data output XI
13. XO Digital I/O Crystal I/O (NC when not used）
14. Digital Input
15. Crystal I/O or external clock input, 0: use on-chip oscillator RATE Digital Input Output data rate control, 0: 10Hz; 1: 80Hz.
16. DVDD Power 16 Digital supply: 2.6 ~ 5.5V

Chapter Eight

FABRICATION/ DEVELOPMENT PROCESS

Materials: For the walker frame a two-wheel walker was chosen because it was similar to the walker already used at the client's clinic. The walker also met the standards set in our product design specification. It was lightweight and could withstand the required loads. For the speed/distance sensing portion of the Smart Walker, IMU (MPU-6050) Gyroscope + Accelerometer Sensor Module was used because it was an affordable, reliable way of sensing. For the weight sensing portion of the Smart Walker, two load cells were used. In addition, to this walker, two custom ski-shaped feet that could accommodate the force sensors were printed to replace the existing ski-shaped feet on the walker. These load cells had an internal strain gauge which outputs an electrical signal in the form of resistance when a force was applied. These load cells were chosen because they were easy to integrate, inexpensive, and more durable than force-sensing resistors. Initially, force-sensing resistors were considered, however, durability concerns and the inability to sense larger force loads ruled them out. Alongside the two load cells, an hx711 amplifier board was used in the circuit. The amplifier board was used because the resistance signal sent by the load cells is very small and an amplifier is needed for the ESP to read it. The hx711 board is standard for load cell circuits. Two ski-shaped walker feet were also used in the Smart Walker. The feet were built so the load cells could fit inside and still be triggered reliably. They were printed out of tough PLA for their durability as both feet will see high wear in regular use. The front ends of both feet were printed with a radius at the end, similar to the feet included with the walker, so the walker can handle more difficult terrain. The terrain, however, should not be too concerning because the walker will be used in a clinic. To receive data from the walker, an ESP8266EX board was used in the Smart Walker. This microcontroller was used because it can connect to WiFi and send the data it collects to a server for storage. The ESP8266EX also uses the Arduino IDE. The Arduino

IDE has a great set of resources which makes it straightforward to find information on the code and the corresponding circuits.

Methods: For distance sensing circuit an MPU6050 was used.The force sensing circuit used two load cells and an hx711 board. The force circuit went through several iterations of sensors and circuit configurations. Initially, four load cells were connected in a Wheatstone bridge circuit. Two of the load cells would have variable resistance and be placed under the feet of the walker while the other two would act as constant resistors. After struggles with this circuit, a new refined circuit was designed using only two load cells depicted. This circuit connected the positive leads of the load cells to the negative leads of the other load cell (depicted by the green and black wires .After connecting the positive and negative leads they were run to the E+ and E- pins of the hx711 amplifier board. The red center tap wires of each load cell were connected to the A+ and A- pins of the hx711 board. The hx711 board amplified the resistance signal from the load cells and output the signal through the DT pin which was connected to a digital pin of the ESP The SCK serial clock pin of the amplifier was connected to a digital pin of the ESP The VCC voltage pin was connected to the shared voltage line on the protoboard and the GND ground pin was connected to the shared ground line on the protoboard . It took several tries and hx711 boards before the connections were good and force was being sensed. One of the major problems was connecting the thin threaded wires of the load cells to the ESP and the other wires. Because of this, the load cell wires were soldered to thicker solid core wires which were cut so they could extend from the feet of the walker to the center of the lower crossbar. The load cells were incorporated into the 3D-printed feet of the walker and the wires ran up along the legs of the walker to the lower crossbar where the ESp and protoboard were located. The force value was found by dividing the voltage signal from the hx711 amplifier by a calibration factor which was determined during testing. The calibration factor used for this circuit was 250.34.

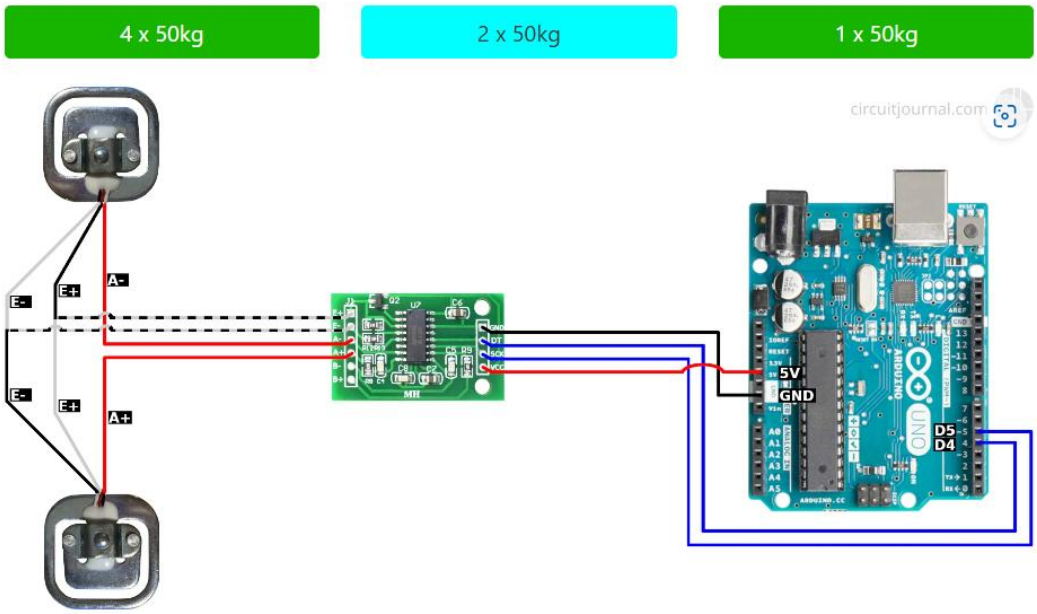

Figure 17: *Pressure Sensing Circuit with two Load Cells*

Finally, the two circuits(speed,weight) were combined to yield the final set of circuits All of the wires going into the ESP8266 or being soldered to the protoboard were solid core wires to ensure good connections.

.**ESP8266:**

ESP8266 is a low-cost Wi-Fi microchip with full TCP/IP stack and microcontroller capability, produced by Espressif Systems.

Here are some key points about the ESP8266:

Features

1. **Wi-Fi Capability**: The ESP8266 can connect to a Wi-Fi network or create its own network, making it ideal for IoT (Internet of Things) projects.

2. **Microcontroller**: It features a 32-bit RISC CPU running at 80 MHz (or overclocked to 160 MHz).

3. **Memory**:

    - 64 KiB of instruction RAM.

    - 96 KiB of data RAM.

    - 4 MiB of flash memory (though some models might have more).

4. **GPIO Pins**: It includes several General-Purpose Input/Output (GPIO) pins for interfacing with sensors, actuators, and other peripherals.

3D-printed gliders:

To integrate the load cell circuit into the walker, 3D-printed gliders capable of housing the load cells were modeled and printed. The process started by modeling new walker gliders based on the size and shape of the original gliders that came with the walker. The preliminary model featured a recess in which the load cell could sit with a second recess in the middle which allowed for the deflection of the strain gauge. The model allowed for the load cell wiring to run out of the back of the foot and up the legs. Additionally, the model incorporated a second piece that attached around the leg of the walker and aligned the center of the leg with the center of the load cell. Lastly, an end cap was printed to fit inside the hollow leg pipe. The model was designed to use four, 4mm-wide screws to fasten the upper and lower pieces together.

ON Shape Version:

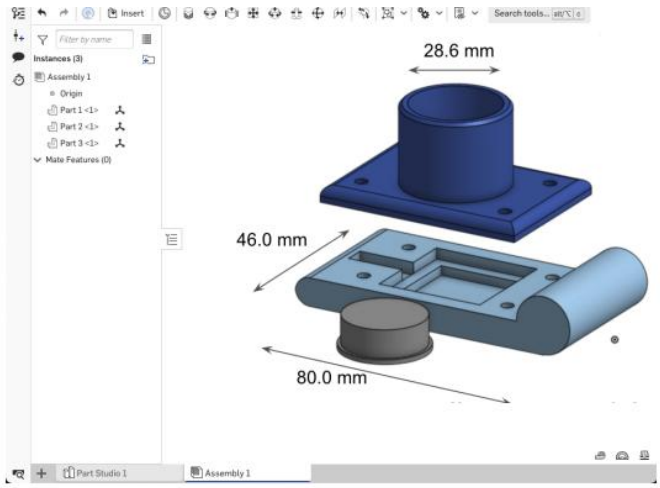

Figure 18: *: Walker Foot Model in Onshape*

AutoCAD version:

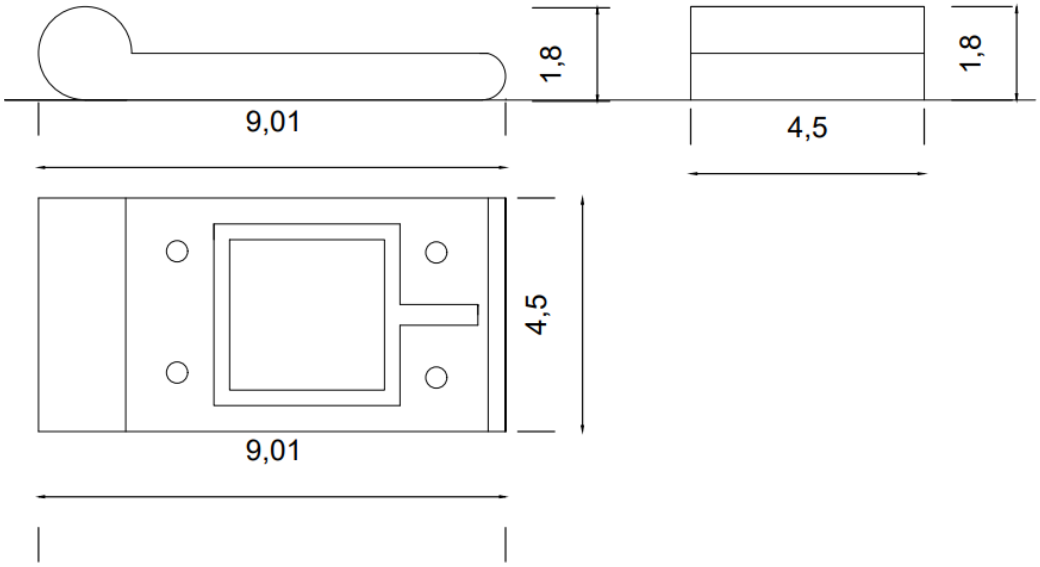

Figure 19A: *: Walker Foot Model in AutoCAD*

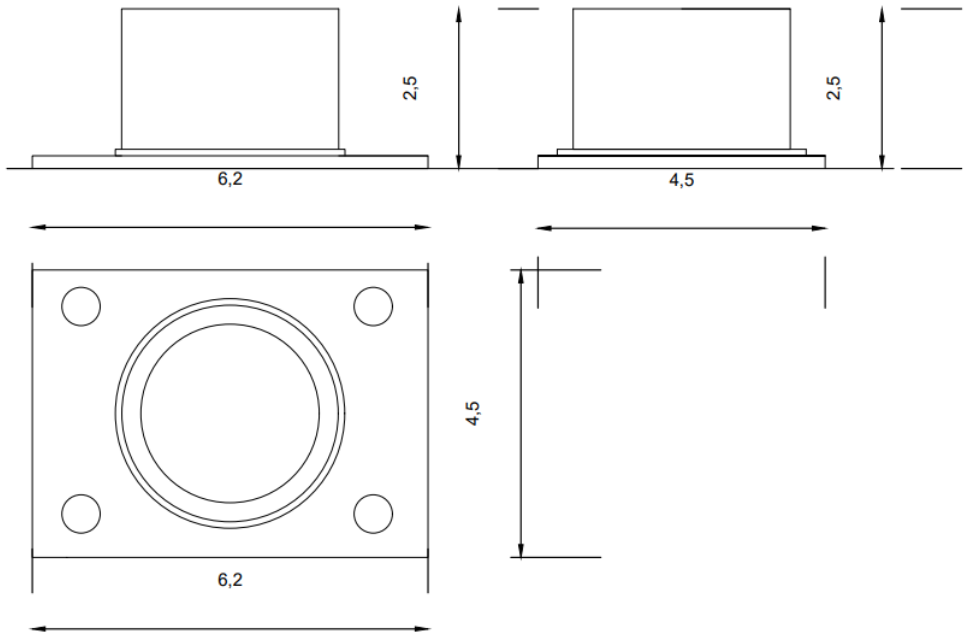

Figure 19B: *: Walker Foot Model in AutoCAD*

This initial prototype was printed out of PLA material with 20% infill to keep costs and printing time down. The initial prototype needed refining after printing, but the general concept seemed to work very well for the walker. Therefore, after necessary adjustments were made to the dimensions of the cuff radius, load cell recess, and screw holes, a second prototype was printed. This time, the infill was increased to 40% to provide a more robust piece that could withstand the forces of the walker and the friction against the ground. Once the second foot model was printed, the print supports were removed and the piece was sanded to fine-tune the fit between the walker leg and the cuff. The foot was then assembled using a load cell, 4, 4-mm screws, and 4 nuts, using Allen wrenches to fully tighten the screws. Once the prototype was deemed functional and no further changes needed to be made, a second foot was printed for the other leg of the walker. This piece too

was sanded and tested to ensure a proper fit. Once both feet were completed, the final prototype could be assembled.

REAl IMAGE OF THE model PLA:

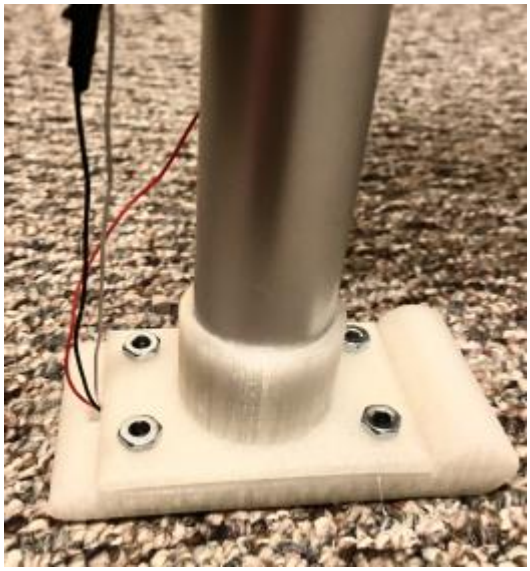

Figure 20: *: Completed Walker Foot Prototype*

3D-printed of the box:

To house all the electrical components a 3D holder was created. Starting by finding the dimensions of all of the components that needed to go into the box. After the dimensions were found a first model of a 3D box was created to be large enough to house all the components. Additionally, the box had to connect to the frame of the walker where all the components were located. The material used was PLA because it is strong and durable with a 30 % infill.

Final 3D Printed Box Model:

Figure 22: *Final 3D Printed Box Model*

Software Development: The software application frontend was coded in SwiftUI in the software program, Xcode, which is a programming language developed by Apple native for iOS application development. There are four main user interface(UI) components to the frontend software application three separate UI components to display speed, distance traveled, and weight in real time and another UI page to allow a physical therapist to create and select a patient. The UI components programmed in SwiftUI are shown below separately. The code for all the UI components and code further described in this section is linked to a private GitHub repository in the appendix. No external libraries were used for the development of the UI. After developing each component individually, they were then integrated into a collective UI on one page as shown below:

Figure 23.A: *User interface*

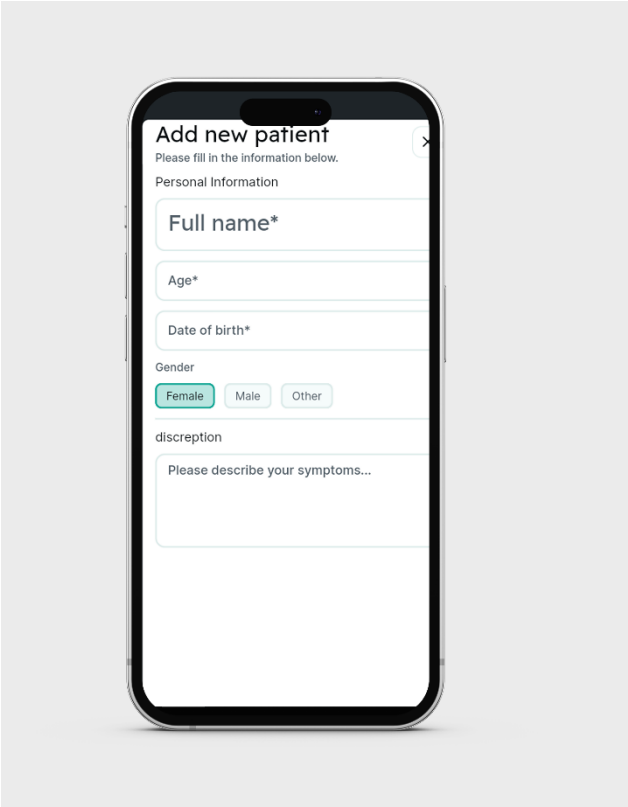

Figure 23.B: *add new patient User interface*

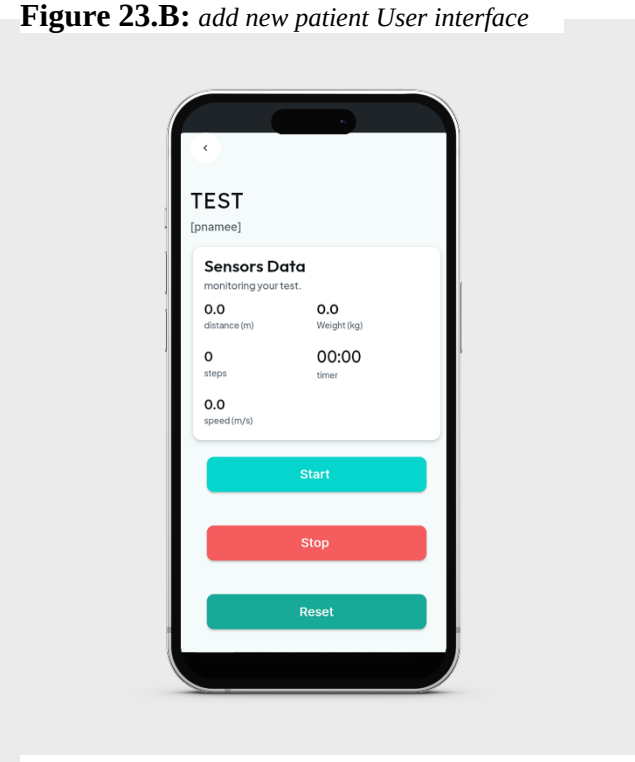

Figure 23.c: *Collective User interface with integrated components*

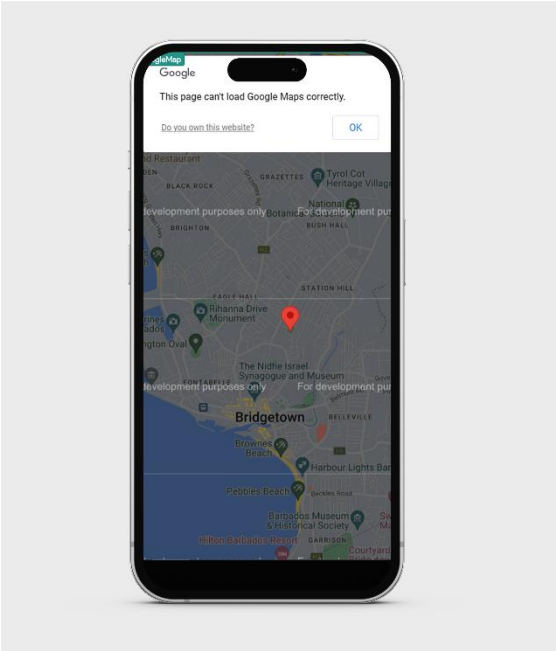

Figure 23.d: *Find gradus User interface*

Firebase Store :

Firebase Store For the software app to display data from the sensors in real time, we used an ESP8266EX board to deliver data to a Google Firebase server. Specifically, Google Firebase is a user-friendly backend that requires no backend code but rather only code on the client/frontend side. Google Firebase offers various features such as app analytics, and advertisement capabilities, and we mainly employed the Firebase Fire store feature which offers database capabilities with the ability for real-time queries for data retrieval and storage to be made. Google Firebase was chosen not only due to the previous experience of teammates but also because of its user-friendly interface where the client would be able to access the server at any time and easily navigate through the data Firebase Fire store stores data in a document collection hierarchy that is similar to JSON. Each document stores data in key-value pairs, and collections store multiple documents. The Firebase fire store server stores various data variables including real-time data on weight, speed, and distance traveled. There is also a list of existing patients, the currently selected patient, and data on all the tests organized by patient. Each test will store data including the date and time of the

test, and the average weight, speed, and distance over the duration of the test. All of this data was organized in the Firebase document collection hierarchy as shown in the below images of the Firebase Fire store interface

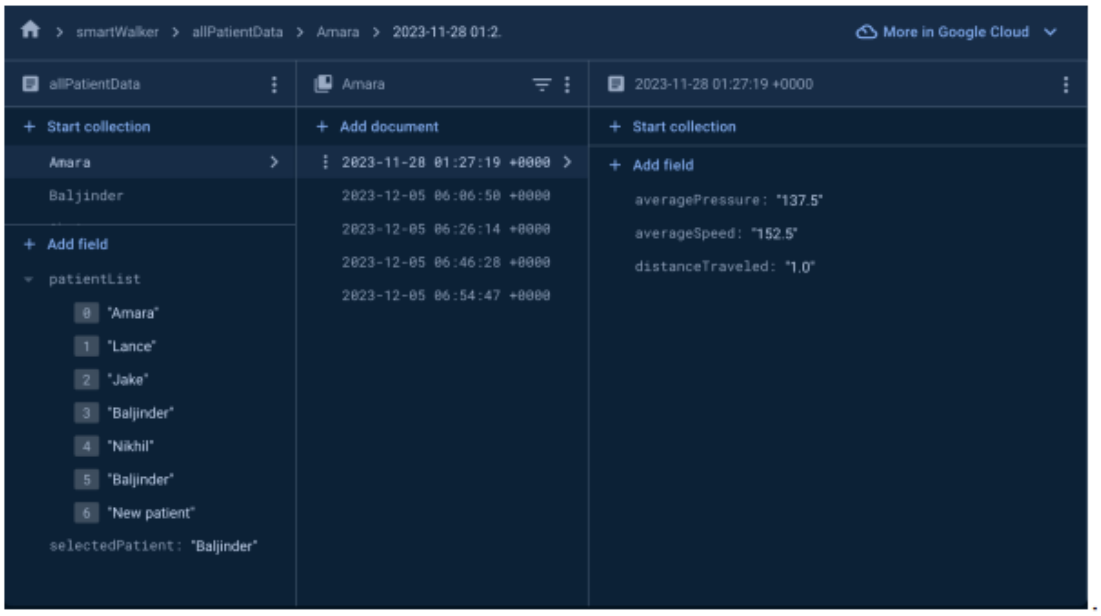

Figure 24: *Firebase patient data test*

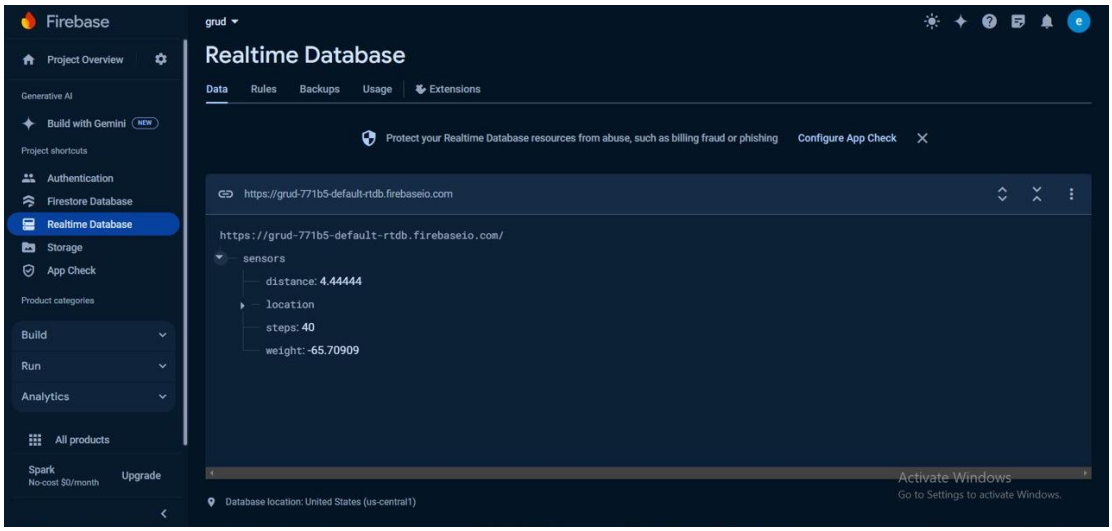

Figure 25: *Real time data firestore*

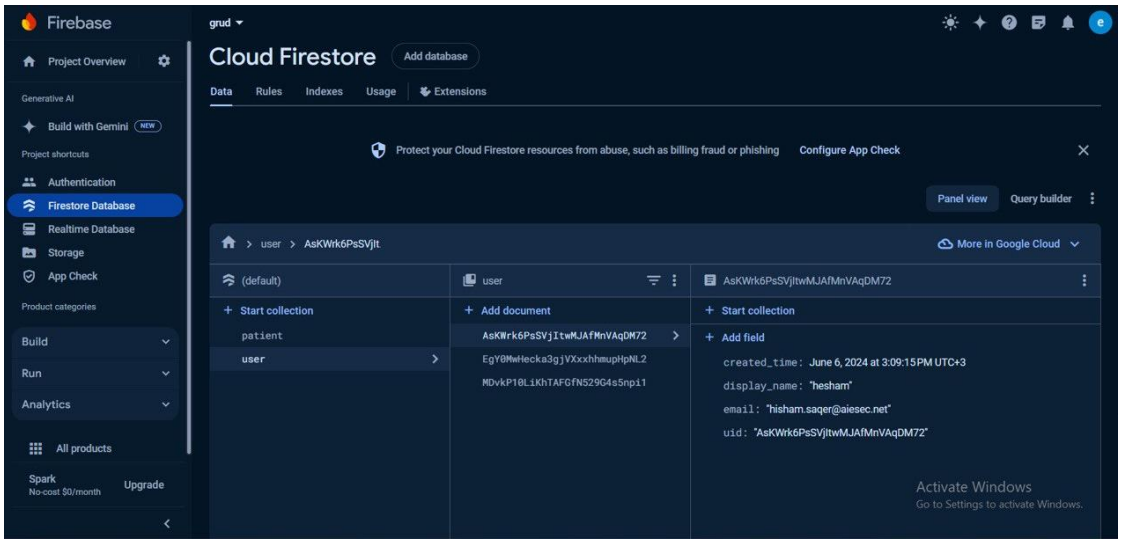

Figure 26: *Patient data firestore data*

Subsequently, to organize the Firestore database structure and develop the software application UI, the ESP8266EX code was developed and integrated into the overall software flow, and the client-server communication code was developed for the ESP and software app. This is generally outlined in the below software flowchart. Note that the calculation for the force and total distance traveled was previously described in the circuits section of the methods.

FLOW Chart

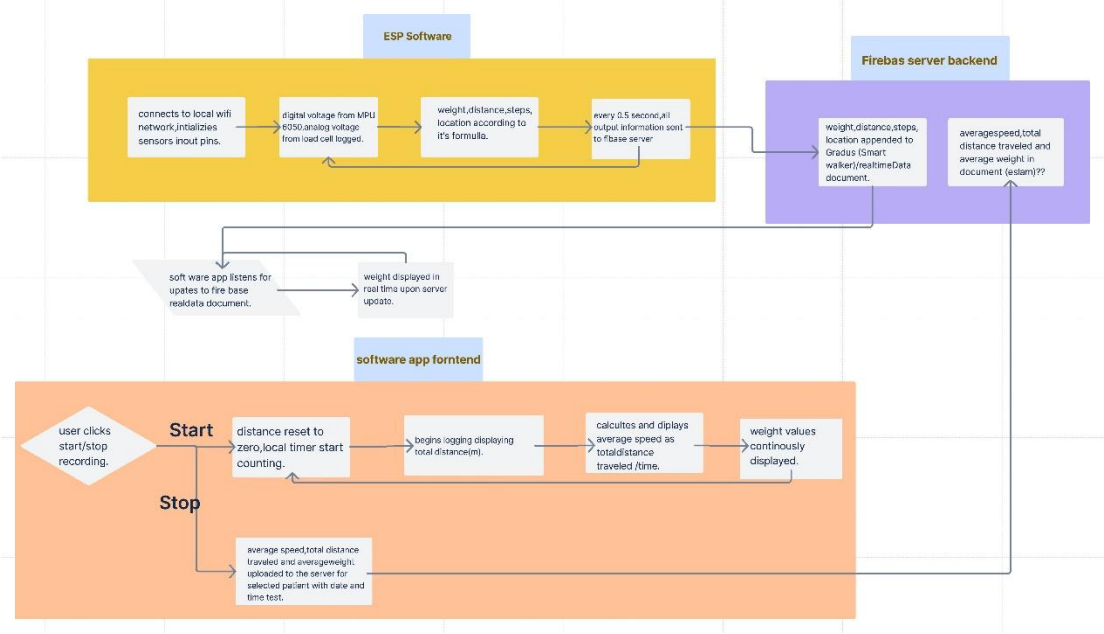

Figure 27: *Overall software flowchart describing relay of sensor data between Arduino, Firebase, and software apporganizationdata structurestructurecomponents*

Description Of the flow chart:

Chapter Eleven

FINAL PROTOTYPE

The final prototype integrates the two sensor systems and a software app on the backend to record and analyze the data. The two load cells on the back two legs of the walker which are housed in 3D-printed feet record the downward force exerted on the walker. These were integrated into the walker by modeling and 3D printing new walker gliders which facilitate smooth movement across the ground and house the load cells. For our speed and distance circuit, an IMU (MPU-6050) Gyroscope + Accelerometer Sensor Module was attached to the walker. This setup allowed for the recording of a 3-axis gyroscope and a 3-axis accelerometer to provide data on an object's orientation, acceleration, and angular velocity. Calculating speed and distance using this sensor involves several steps and some computational techniques. The sensor systems were hardwired to an IMU (MPU-6050) Gyroscope + Accelerometer Sensor Module, GPSNEO-6M with the load cell circuit being wired through an amplifier board before connecting to the ESP8266EX microcontroller. The data was then sent through a WiFi connection to the Firebase server, from which the software app drew live data, performed the calculations, and presented the data in a user interface. Altogether, the walker is used the same as any other standard two-wheel walker, yet the embedded sensor systems serve to provide live data to the client's smartphone about the force exerted on the walker, speed of travel, and distance traveled.

FINAL PROTOTYPE:

Figure 28 *final prototype image*

Chapter Twelve

TESTING & RESULTS

Testing: Before the bulk of the testing was done, a short test was performed to find the calibration coefficient of the load cell circuit. To do this, an object's weight was measured using a bathroom scale and then placed on the handles of the walker with the weight distributed equally. After inputting the known weight of the object into the calibration code, a calibration coefficient was output for use in the main code (Appendix C). The weight was removed and replaced 3 times to ensure that the coefficient remained constant. This coefficient was then put into the main code, and the rest of the testing was done. To test the weight, 3 objects were placed on the bathroom scale to measure their weights. After their weight was recorded, the objects were placed on the handles of the walker and the weight values shown in the app were recorded after 5 seconds to allow for settling. 3 trials were performed at each weight, as well as 3 trials with no weight applied to the handles. It was observed that when the weight was removed, the weight values shown in the app did not return to zero. To combat this, a zero button was created in the app and subsequent tests more accurately reflected the actual values. To test the Step and distance design we considered:

1. **Noise and Drift:** IMU sensors are prone to noise and drift, which can accumulate over time and lead to significant errors in velocity and position calculations. Implementing filters like a Kalman filter or a complementary filter can help mitigate these issues.

2. **Calibration:** Proper calibration of the sensor is essential for accurate measurements. This includes calibrating both the accelerometer and gyroscope.

3. **Sampling Rate:** The accuracy of the integration depends on the sampling rate. A higher sampling rate reduces integration errors but requires more processing power and memory.

4. **Gravity Compensation:** When calculating linear acceleration, it's important to subtract the effect of gravity from the accelerometer readings. This can be done using the gyroscope data to determine the sensor's orientation relative to the Earth.

After this consideration, we started mounting the MPU-6050 on the Walker. Used initial calibration routines to determine the baseline offsets for the accelerometer and gyroscope. Perform a series of static tests where the sensor remains stationary to capture and correct any zero-point drifts in the accelerometer and gyroscope. Error Observation: Initial Steps showed a significant drift in velocity and position over time, even when the sensor is stationary. Correction: Adjust calibration parameters and repeat static tests until the drift is minimized. After a series of tries & errors, we figured out the right vibration-sensing value.

For testing the GPS module, we Attached the GPS Neo 6M module to the walker in a position with a clear view of the sky. Connecting to ESP8266: Connect the GPS module to the ESP8266 microcontroller using the appropriate pins (typically using UART communication: TX from the GPS to RX on the ESP8266, and RX from the GPS to TX on the ESP8266). Ensured both the GPS module and ESP8266 had a stable power supply, possibly from a rechargeable battery pack attached to the walker. We tried different codes to Write a program for the ESP8266 to read data from the GPS module, extract longitude and latitude, and send this data to a server or directly to Google Maps API. we faced some errors like:

- **Slow GPS Fix:** The GPS module might take a long time to acquire satellites. So we Ensured it was placed in an optimal position and tried again.

- **Inaccurate Readings:** The initial readings may be inaccurate due to poor signal or multipath effects.

After clearing the software and hardware errors, finally we found the right code and place for the GPS and knew that we only relied on the GPS Module in outdoor sessions.

Results: For each of the 3 trials for 3 different known weights, the force (N) values shown in the app were recorded. The calibration factor used was 250.34. The average force of each group of 3 trials was calculated and converted into kilograms using: $Mass\ (kg) = (1)\ Force\ (N)\ g$ where g = 9.81. The distribution of scale weight vs average walker weight values can be seen in Figure:

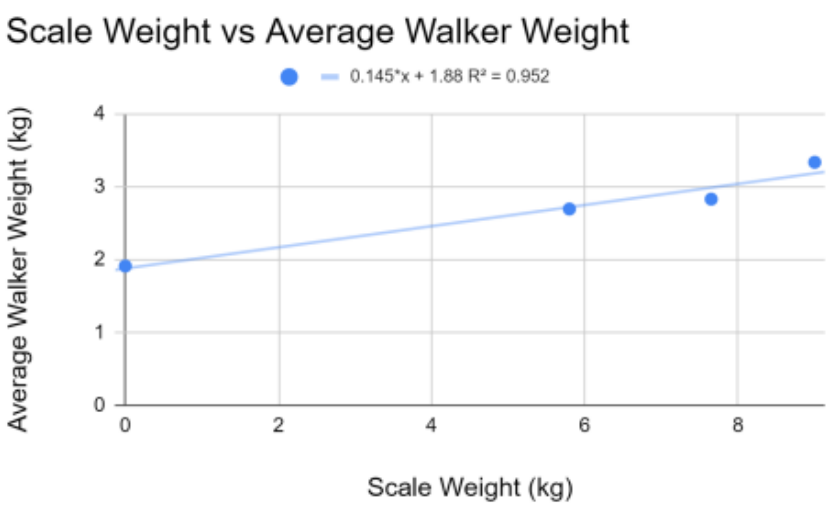

The paired t-test was applied to the expected (scale) weights and the actual (walker) weights using the Google Sheets Test command, and a p-value of 0.42 was returned. This means that at 95% significance—when α = 0.05 < 0.418—the expected and actual values are not statistically different. The error between each scale reading and the average walker reading was calculated, and it was found that the average error was 7.97%. A confidence interval at 90% significance was determined in Google Sheets using the "TINV" command: $Confidence\ Interval$ (0. 90) = $TINV$(0. 05, 8) × (2)

$s\ n$ where standard deviation (s) = 0.04, and sample size (n) = 8. The confidence interval indicated with 90% confidence that the mean error between the measured and true weight values would be between 3.47% and 12.47%.

Using the time and distance values recorded manually during speed testing, the speed of the walker during each of the 4 trials was calculated and compared to the speed values displayed in the app. The results can be seen in Figure.

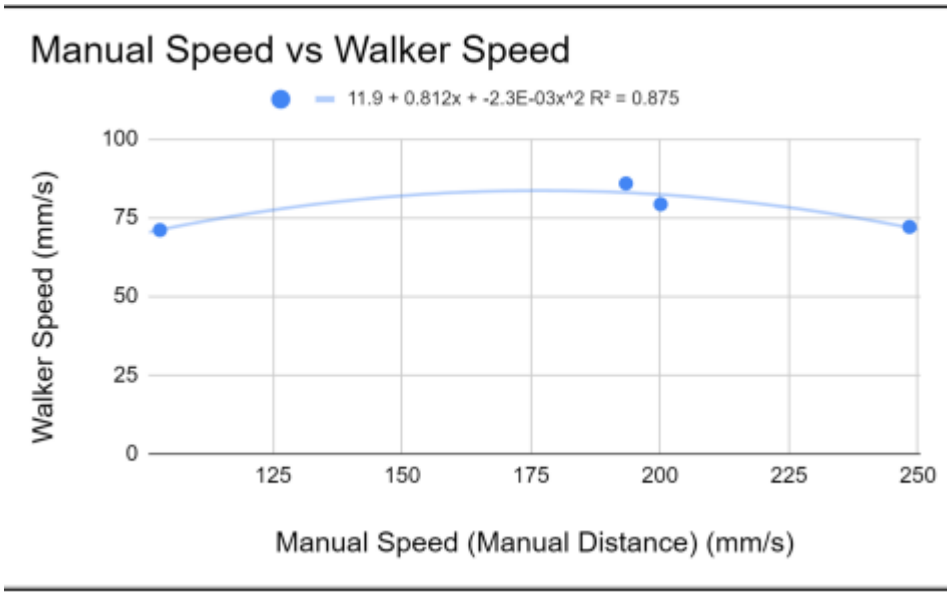

The average error between the manually calculated speed and the speed displayed by the walker was 31% and increased with speed. This is far greater than the design specification of 5% accuracy. A paired t-test returned a p-value of 0.03, which is less than α = 0.05 at 95% significance, so these two data sets are statistically different. It was observed that the speed read by the walker remained around 75 mm/s even as the actual speed increased. A proposed explanation for this is due to the sensor delay caused by communication between the ESP and Google Firebase. When the ESP is sending data to the app, it is not reading the sensors. So at slower speeds, fewer magnets are sensed each time the ESP communicates with the sensors, but there are more periods of sensing over the course of a distance. At higher speeds, the ESP senses more magnets each time it communicates with the sensors,

but there are fewer periods of sensing over the course of the same distance. This limits the ability of the design to accurately determine the speed of the walker. During the testing of the speed, there was no impedance by the added electrical elements into the path of the walker user, and the legs of the walker were adjusted between their shortest and longest lengths with no effect on the electrical elements. Additionally, there were no modifications made to the structural integrity of the walker itself and it was observed to safely support the entire body weight of a grown adult multiple times. These observations all satisfy design requirements.

Chapter Thirteen

DISCUSSION

To comprehensively evaluate the prototype's key components, namely the load cell force sensors and the Step tracker system for speed and distance measurement, we executed two experimental sets. These experiments were designed to benchmark the sensor outputs against known weights and manually recorded speed values. Regarding precision, the force and speed sensor systems demonstrated the ability to register measurements down to 0.1 N and 0.1 m/s, respectively. On the aspect of accuracy, the load cell system within the prototype showed a promising alignment with the actual force values, albeit with a slight deviation. The observed average error margin of 7.97% slightly overshoots the target of 5% set in the product design specifications. This discrepancy suggests a necessity for refining the sensor system. Potential sources of error in the force sensors could include sensor drift, as indicated by an increasing error margin over the duration of tests and a failure to reset to zero post-load removal. To rectify this, we plan to conduct further trials to map the drift pattern in sensor values and potentially implement a recalibration method or an adaptive zeroing system to adjust the sensor output dynamically. The problem may also be due to the physical housing of the load cells that may cause the applied weight to persist even when a load on the walker is removed, and a redesign of the housing that can consistently dissipate energy upon removal of a load such as through the use of springs may more effectively minimize sensor drift. In addition, the average error between the manually measured speed values and measured values was 31%, notably higher than the target of 5%, and thus significant refinement is needed to improve the accuracy of the magnetic speed measurement system. Various sources of error could have led to inaccurate speed measurements. Each time a magnet is not sensed by the Hall effect sensor, the distance traveled does not increase, and in turn the speed decreases as the time continues to increase. In turn, a more sensitive Hall effect sensor or stronger magnets could improve magnetic sensing. Further tests should be conducted to specifically evaluate the frequency at which magnets are not sensed by the Hall effect sensor, and it may be possible to in turn develop an experimental offset value to adjust the speed values accordingly in real time to be more accurate. Another major potential source of error could be the conflict between the Arduino’s client-server communication and the sensor readings, where when the Arduino is sending data it is unable to asynchronously also read sensor readings. Two separate Arduinos would be required to independently handle client-server communication and real-time sensor data processing. Other major components of the product design specification tested related to the assembly of the walker. The added weight of the walker from the sensor systems, 3D printed gliders, and microcontroller was 0.23 kg which was successfully less than the 1.81 kg target ensuring that the walker is not heavy for the patient to move or for the physical therapist to move to storage. There were no bugs encountered with the software app throughout the duration of testing and it reliably continuously displayed real-time force, speed, and distance values as intended. From visual inspection, the wires and microcontroller do not conflict with the handles or inner center of the walker, however, running the wires through the tubes of the walker and creating housing for the electrons will further decrease potential interference of the assembly with the patient.

Chapter Fourteen

CONCULSION

Physical therapists often aim to reduce the dependency of patients involved in the physical neurorehabilitation process and currently manually determine or visually observe the patient's applied weight on the walker, their speed, and distance traveled to assess progress. Throughout the project, a sensorized smart walker tailored to clinical settings was developed that would be able to provide real time objective sensor data on applied force, speed, and distance traveled. The data could be vital in the long term for diagnostic purposes, insurance evaluation, and patient motivation. The final design of the walker encompassed two load cell sensors integrated into the gliders of the walkers with a magnetic speed sensing system including a Hall effect sensor to detect magnets equally spaced along the wheel to calculate angular rotation. An Arduino would store data every second in a Google Firebase server that would be retrieved and displayed on a software app in real time. The average error of the force and speed sensing systems was 7.97% and 31% respectively, indicating the need for further refinement of the calibration of the sensors to reach the 5% accuracy target. For future semesters, it would be necessary to develop an adaptive zeroing system and redesign the load cell housing to address the sensor drift of the load cell sensors being a major source of error. In improving the speed sensor system, the integration of stronger magnets, a more sensitive Hall effect sensor, and the inclusion of separate Arduino for client server communication would increase the frequency at which magnets are sensed when they pass by. The software application successfully was able to display data in real time, and the server was effectively organized to store data during tests for analysis by the physical therapist in the long term. In addition it would be necessary to install the housing unit of the Arduino and ensure that its size is appropriate to effectively store all the electronics, and if not we will continue to refine the dimensions of the electronics box. We also plan to hide the wiring on the sides of the walker to decrease interference with the patient. It would be necessary to then continue to run tests in a clinical setting with the prototype and receive feedback from both patients and the physical therapists. Further down the line, with the development of a final product, we would then be able to investigate the potential for filing a patent or scaling development of the product. As a whole, a sensorized smart walker represents a significant step forward in enhancing the neurorehabilitation process by providing vital data for progress monitoring of a patient's motor independence

Chapter Fifteen

REFRENCE

[1] M. Bonanno, R. De Luca, A. M. De Nunzio, A. Quartarone, and R. S. Calabrò, "Innovative Technologies in the Neurorehabilitation of Traumatic Brain Injury: A Systematic Review," Brain

Sciences, vol. 12, no. 12, Dec. 2022, doi: 10.3390/brainsci12121678. [2] "A review of the functionalities of smart walkers," Med. Eng. Phys., vol. 37, no. 10, pp. 917–928, Oct. 2015. [3] S. F. Tyson, J. Greenhalgh, A. F. Long, and R. Flynn, "The influence of objective measurement tools on communication and clinical decision making in neurological rehabilitation," J. Eval. Clin. Pract., vol. 18, no. 2, Apr. 2012, doi: 10.1111/j.1365-2753.2010.01555.x.

[4] "Camino : The World's First Smart Walker," Camino Mobility. https://caminomobility.com/ (accessed Oct. 13, 2023).

[5] "Website." https://www.rehabmart.com/product/ambutrak-movement-tracker-for-rolling-walkers-47972.html

[6] S. V. Moses et al., "Intelliwalker, an intelligent, sensor equipped, motorized robotic walking assistance device," 20160074262:A1, Mar. 17, 2016 Accessed: Oct. 13, 2023. [Online]. Available: https://patentimages.storage.googleapis.com/76/cd/33/6cd1151786453c/US20160074262A1.pdf

[7] S. L. James et al., "Global, regional, and national burden of traumatic brain injury and spinal cord injury, 1990–2016: a systematic analysis for the Global Burden of Disease Study 2016," Lancet Neurol., vol. 18, no. 1, pp. 56–87, Jan. 2019.

[8] J. Li et al., "Rehabilitation for balance impairment in patients after stroke: a protocol of a systematic review and network meta-analysis," BMJ Open, vol. 9, no. 7, 2019, doi: 10.1136/bmjopen-2018-026844.

[9] T. Riandini et al., "Fall Risk and Balance Confidence in Patients With Diabetic Peripheral Neuropathy: An Observational Study," Front. Endocrinol. , vol. 11, 2020, doi: 10.3389/fendo.2020.573804. [10] A. F. Barbosa et al., "Gait, posture and cognition in Parkinson's disease," Dementia & Neuropsychologia, vol. 10, no. 4, p. 280, 2016.

[11] T. Alkjær, P. K. Larsen, G. Pedersen, L. H. Nielsen, and E. B. Simonsen, "Biomechanical analysis of rollator walking," Biomed. Eng. Online, vol. 5, p. 2, 2006.

[12] "Walker," American Medical & Equipment Supply - Lift Chairs Recliners, Home Medical Supplies, Supports Canes and Crutches, Wound Care Supplies, Incontinence

Supplies. http://www.americanmedicalinc.com/store/p87/walkers.html (accessed Oct. 13, 2023).

[13] "Amazon.com." https://www.amazon.com/dp/B0015GK2KQ?psc=1&ref=ppx_yo2ov_dt_b_product_details (accessed Oct. 13, 2023).

[14] "ISO 14971:2019," ISO, 2019. https://www.iso.org/standard/72704.html (accessed Oct. 13, 2023).

[15] Office for Civil Rights (OCR), "Your Rights Under HIPAA," HHS.gov, May 07, 2008. https://www.hhs.gov/hipaa/for-individuals/guidance-materials-for-consumers/index.html (accessed Oct. 13, 2023).

[16] "[No title]." https://www.ti.com/lit/pdf/slyt824 (accessed Oct. 13, 2023).

[17] C. Maglie et al., "WiFi Library for Arduino", GitHub, Aug. 2018. https://github.com/Arduino-libraries/WiFi

[18] K. Suwatchai, "Firebase Arduino Client Library for Arduino Devices", GitHub, Nov. 2023. https://github.com/mobizt/Firebase-ESP-Client

[19] "Cloud Firestore", Google, Nov. 2023. https://Firebase.google.com/docs/firestore

CHAPTER FIFTEEN

APPENDIX

Appendix A - Project Timeline

	details	start	finish	Expected members
Target1	- Information gathering to make a checklist of hardware components that can be used	21/11/2023	12/12/2023	-mohamed mousa -Hesham osama
Target2	-Purchasing the necessary equipment and appropriate components to implement the project based on previous research.	12/12/2023	25/12/2023	-adham yasser
Target3	-Electrical design - Electrical simulation - Information gathering about the microcontroller and its programming	25/12/2023	25/1/2024	-adhm ahmed -eslam osama
Target4	-program the microcontroller chosen from the previous task.	25/1/2024	15/3/2024	-adhm ahmed -eslam osama

	-implementation of the code of the MC to the rest of the components			
Target5	-Implement IoT connectivity for real-time data transmission and storage -Develop a user-friendly interface for both patients and healthcare providers. -Evaluate the device's effectiveness in improving patient outcomes and independence.	15/3/2024	15/4/2024	-eslam osama -adhm ahmed
Target6	-hardware connection. -testing	15/4/2024	15/5/2024	-mohamed mousa
Target7	-Book & Presentation	15/5/2024	15/6/2024	-Hesham osama --adham yasser

Table 4: project time line

Appendix B - Materials & Budget

COMPONENTS	NUMBER	COAST (EGP)
Weight sensor	2	195
HX711 ADC Converter Breakout Module for load cell	1	165
ESP8266EX	1	2013
Other electrical components	-	1000
Handle Cover	2	200
Medical walker body	1	1900
3D PRINT		
3D Printed Glider - PLA (Prototype)		
3D Printed Gliders - PLA		
3D Printed Box - PLA(Prototype)		

MISC		
Screws		
Electric Tape		
TOTAL	-	5473

Table 5: materials and budget

Appendix C – Prototype Code&Datasheets

- **QR code Link to all the codes:**

- **Datasheet for ESP8266EX:**
  https://www.espressif.com/sites/default/files/documentation/0a-esp8266ex_datasheet_en.pdf
- **Datasheet for IMU (MPU-6050) Gyroscope + Accelerometer Sensor Module:**

https://invensense.tdk.com/wp-content/uploads/2015/02/MPU-6000-Datasheet1.pdf

- **Datasheet for GPS Neo 6M:**

https://content.u-blox.com/sites/default/files/products/documents/NEO-6_DataSheet_%28GPS.G6-HW-09005%29.pdf

- **Datasheet for 24-Bit Analog-to-Digital Converter (ADC) for Weigh Scales (HX711):**

https://cdn.sparkfun.com/datasheets/Sensors/ForceFlex/hx711_english.pdf

Appendix D - Product Design Specifications

Smart Walker

Product Design Specification (PDS) Function

1. *Yousef Osama Abdelrahman 91123*
2. *Adham Yasser Roshdy 91154*
3. *Eslam Osama Mahmoud 91155*
4. *Mohamed Mossa Abdelmalek 91173*
5. *Adham Ahmed Ali 91549*
6. *Hesham Osama Kamel 92999*

Supervised By:

Dr. Islam A. Fouad *Dr. Nader A. Rahman*

CONTENTS OF PDS:

Patients with mobility impairments involved in the neurorehabilitation process often use walkers as transitional devices that can aid with their coordination and balance. Within the rehabilitation process, clinicians or physical therapists often aim to reduce a patient's dependency upon walkers as they regain motor control. However, there is yet to be a commercial smart walker that can track a patient's functional independence and deliver objective data for physical therapists and patients. The client requests a sensitized smart walker that can track in real time a patient's distance traveled, gait speed, and applied weight distribution on the walker. In turn, the smart walker will be capable of tracking a patient's motor control through their dependency on the walker and provide objective data of improvement over time. The data can be utilized for motivational purposes for the client along with insurance/Medicare reasons to evaluate the efficacy of intervention strategies. As a whole, a sensitized smart walker would enhance the neurorehabilitation process by providing vital data for progress monitoring of a patient's motor independence.

Client requirements

● The product can be designed specifically for the walkers being used in the clinical setting of Specialized Hospitals and Rehabilitation Centers:

- Naser Institute for Research and Rehabilitation of the Disabled.
- El Nada Hospital and Rehabilitation Center.
- Dar El Oyoun Hospital.

o Maadi Military Hospital.

● The product should be durable for daily repeated use with minimal maintenance, and should not be sensitive to sanitizing wipes.

● The product must be produced within a budget of $400 including the purchase of the walker, electronics, and any other materials.

● A display or smartphone app to show data including gait speed, distance traveled, weight, in real time is necessary for the patient and for monitoring by the therapist

● A start and stop button for recording data is necessary for conducting intervention tests in a clinical setting.

● The raw time series data should be uploaded to a server in real time or stored locally for access and analysis by the clinician.

● The distance should be measured in meters, gait speed in meters/second,, and the weight in N/meters^2

. It would also be preferable that the walker senses a weight distribution on the left and right side of the walker to better capture weight imbalances.

Design requirements:

1. Physical and Operational Characteristics a. Performance requirements: The walker will be used for short distances of 3-5 meters, at low speeds of 1 m/s, and less than average body weight(70 kg) will be applied on the walker. The device will be used daily for multiple tests throughout a day, where each test can have a duration of an hour or more. The smart walker will need to provide consistently accurate measurements of the weight that the patient is applying to the walker, the gait speed of the patient, and the distance traveled. The smart walker needs to be durable and of sound construction to prevent further injury to patients during rehab. b. Safety: Safety is an important consideration in the design of the walker because the primary users already have a neurological or physically related injury putting them in a compromised state. Standards govern all parts of the walker and must be followed to ensure a safe product. Manufacturing standards around walkers exist to ensure that walkers can effectively and safely support the balance, coordination, movement, and weight of a patient. In turn, we need to sensitize a smart walker that does not compromise some of these essential standards that have been developed to minimize the potential risk for injury for users. Specific specifications include, the diameter of the walker tip must be at least 44 mm in diameter where it contacts the floor and the hole that the shaft of the walker fits into must be 35 mm deep. The shafts of the walker should be adjustable to ensure proper fit for all patients reducing risk of injury. The frame should be lightweight with the upper tube being at least 25.4 mm x 1.62 mm and the lower tube being at least 21.6 x 1.4 mm. The walker frame must withstand a load of at least 100 kg [1]. Ensuring that the sensorized smart walker does not deviate significantly(>5%) from the following manufacturing standards ensures that the walker will be safe for the patient to use and fall within insurance guidelines. There are other more general safety standards for medical devices and user privacy including standards such as ISO 13485 (medical devices) and ISO 14971 (risk management) which will be essential to consider, and are elaborated further in the standards section. Moreover in regards to material safety, durable hand grips resistant

to perspiration and scuffing are important for maintaining a secure grip and preventing accidents. Water damage can pose electrical hazards and compromise the functionality of the sensors. The tips of the feet of the walker should also be non-slip and replaceable. In regards to safety labels, there will be comprehensive labeling and indicators including an on or off LED or labels for multiple buttons. We will also prepare a guide that would include instructions on proper use, any weight limitations, and maintenance guidelines. A datasheet of expected values and ranges for speed, weight, … etc. can be prepared such that the clinician is aware when values fall outside of the range to evaluate if the sensors are faulty and need repair. Additionally the electrical components of the sensors must be water resistant to prevent damage during routine cleaning and sanitation. They also must be compact enough and secure enough to not impede the patient while the walker is in use while again fitting the aforementioned manufacturing standards for walkers. We do not intend on using any chemical or thermal components in sensitizing the walker. c. Accuracy and Reliability: Because the walker will not be used over long distances.

d. Life in Service: The walker should be able to last a minimum of 5 years which is the estimated lifespan of most mobility aids [2]. However, our walker should be expected to have a much longer lifespan considering it is used in a controlled environment over shorter 1 hour periods of time with flat surfaces. But in order to ensure that the sensors are still accurate the walker should be serviced at least once a year. The walker will need regular service to ensure that the batteries are charged and sensors still output values within the specified accuracy and precision tolerance. e. Shelf Life: The walker should be stored in a dry environment around room temperature. Alkaline batteries will likely be used to provide power to the walker. Alkaline batteries have an ideal storage temperature of 59 oF and will store for ten years with only moderate capacity loss [3]. Assuming the use of an Arduino microcontroller, the smart walker will have a shelf life of 20-30 years if it is kept near room temperature [4]. Conditions for the shelf life of the product will be further refined as we understand more about the sensors and specific electronic or mechanical components involved in our final design and prototype. f. Operating Environment:

The walker will be used in a clinical setting, so it will be exposed to a clean, room temperature (15-25°C) environment. As it will be used by multiple patients, it will need to be sanitized between uses and should not be sensitive to sanitizing materials. Due to varying patient weights and abilities, the walker will be subject to a range of weights, and should be safe up to 136 kg of both continuous and intermittent weight. Due to the clinical setting, no extreme conditions need to be considered, and the Smart Walker will be used under supervision so there should be no unforeseen hazards. g. Ergonomics: As the walker will be used by numerous patients, it will need to accommodate a variety of weights, and the handles should be adjustable to hip level for a variety of heights [5]. Like an average standing walker, the walker will have adjustable legs to be used comfortably in the range of 1.65m to 1.98m, and will support up to 136 kg of weight [6]. As the patients will be re-learning to walk, the walker should move smoothly across the floor so as not to impede their movement, and should not have any sharp edges that could cause injury to the patient. The Smart Walker will be used under professional supervision, so it can be expected that the walker will be used properly, with a hand on each of the handles, but the walker should remain stable should the weight on each handle be unequal. Any display on the walker should not distract the patient from keeping their focus safely ahead of them. h. Size: The walker should be sized similarly to most walkers on the market, with a maximum width of 63.5cm so that it can pass easily through all standard doorways. The walker should be between 81.28cm and 101.6cm tall in order to accommodate patients with various heights ranging from 1.65m and 1.98m. To aid in the versatility of the device to fit patients of all sizes, the device needs to maintain the ability to adjust the grip heights. Ideally, the device should be foldable in order to be easily transported and stored, however because it will only be used in a clinical setting, the strength and durability of the walker is more important. The device and its components should be easily maintained and accessible in the case of technical issues. i. Weight: The walker needs to be of reasonable weight, ideally between 4.54kg and 9.07kg such that it can be easily moved both by patients during clinic sessions and by the client for storage purposes. The distribution of the weight of the

components should also be monitored to provide the ideal walking experience. The device should be robust enough to support a maximum weight of 136kg in order to accommodate all patients in their recovery. j. Materials: A material that is commonly used in the frame of walkers that is both light and strong is aluminum tubing [14]. Additionally, the padding on the handles of the walkers is typically composed of vinyl. These materials have been tested for comfort, safety, and the integrity of the walker. If we intend on introducing new components that will be attached to the handles or can change the structural integrity of the walker, these same materials should be used. There are a variety of materials that we should not use as they may be affected by sanitization, are absorbent to perspiration, or can be breeding grounds for bacteria, which may decrease the life in service or shelf time of the product and may not be most appropriate in a clinical setting. For example, wood, cloth or fabric, leather, and non slip rubber all can introduce sanitization, maintenance, or even safety issues [15]. k. Aesthetics, Appearance, and Finish: The walker should have simple aesthetics because the most important part of the smart walker is that it aids in the recovery of a patient and that it is comfortable for them. The color can be as simple as the natural gray color of aluminum. The shape of the walker should allow it to be transported easily so it is accessible for the hospital and different patients. As mentioned previously a handle that is of vinyl material or resistant to perspiration should be used to ensure the texture of handles can allow the patient to have a good grip at all times